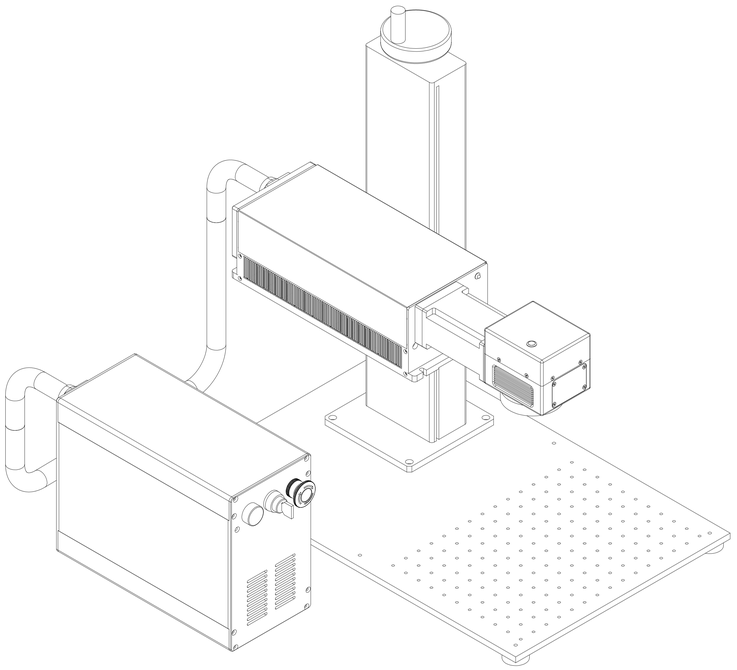

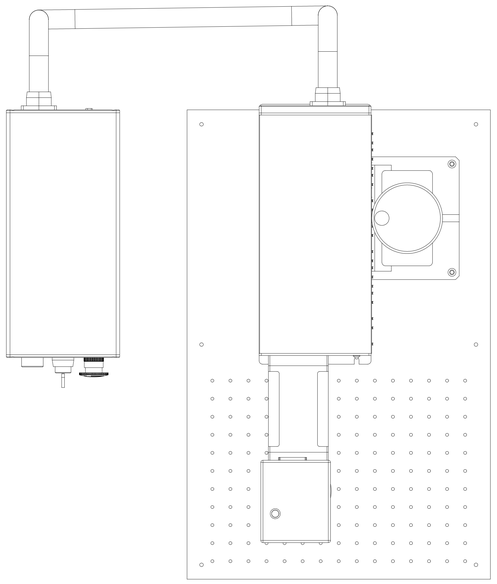

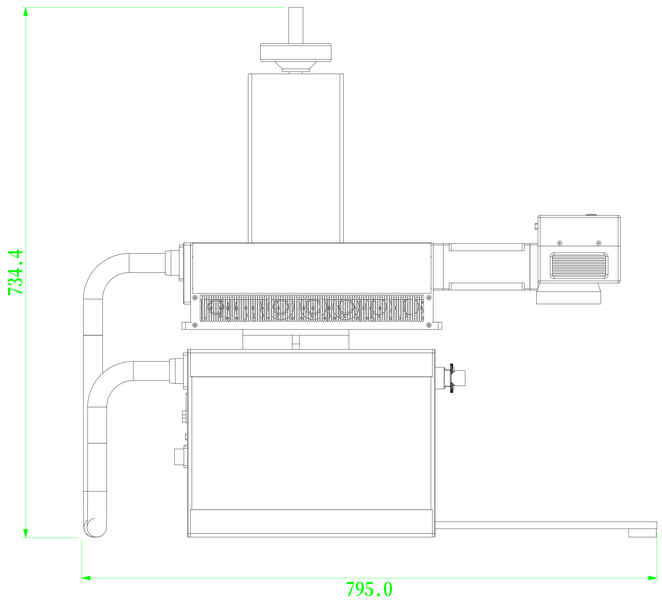
734.4
795.0

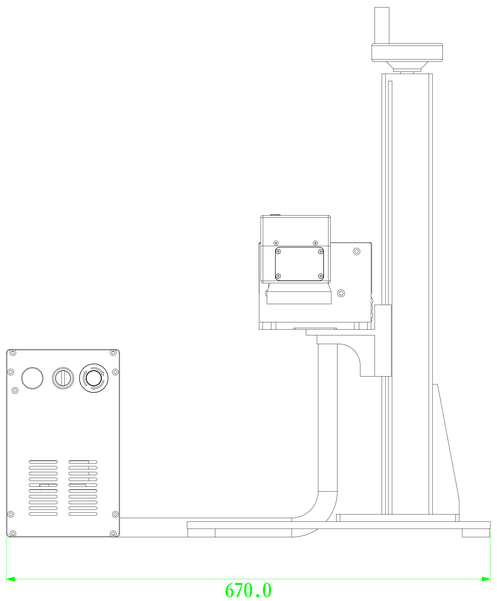
670.0