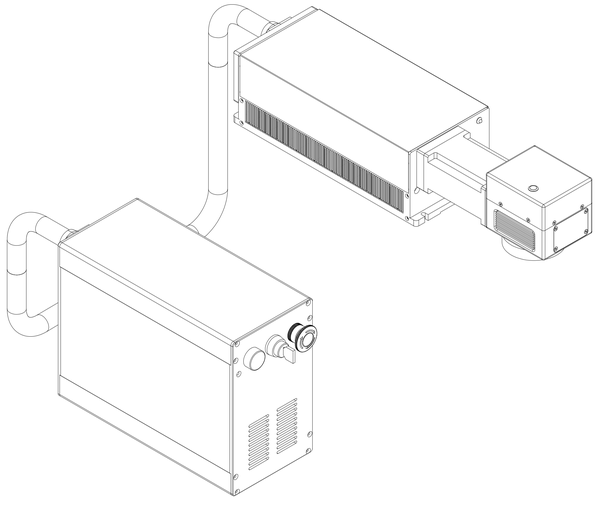

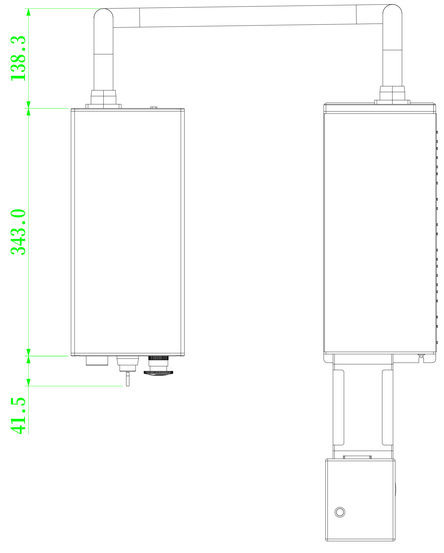
138.3
343.0
41.5

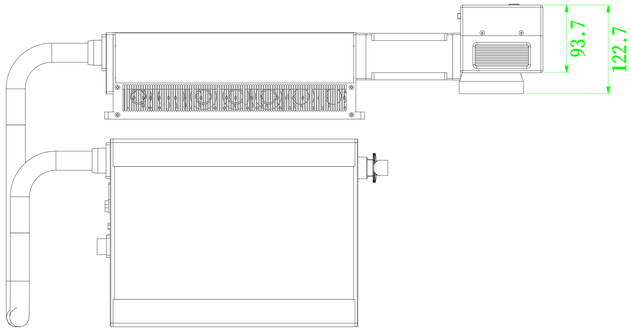
93.7
122.7

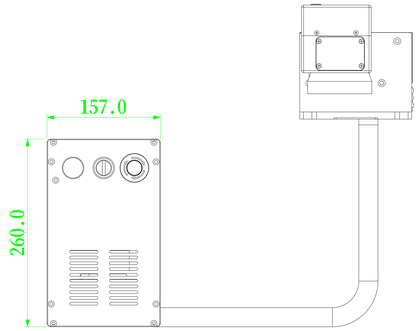
157.0
260.0

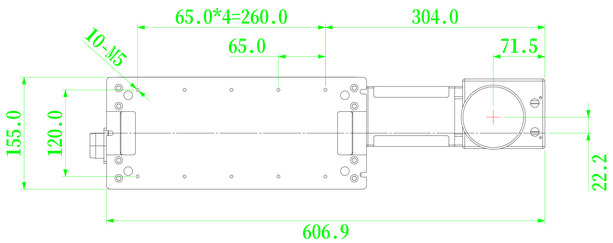
65.0*4=260.0
304.0
10-M5
65.0
71.5
155.0
120.0
22.2
606.9